USB-1208HS-2AO

High-Speed Analog Input and Digital I/O

User's Guide

Document Revision 3A
March 2013
© Copyright 2013

MEASUREMENT COMPUTING™

Trademark and Copyright Information

Measurement Computing Corporation, InstaCal, Universal Library, and the Measurement Computing logo are either trademarks or registered trademarks of Measurement Computing Corporation. Refer to the Copyrights & Trademarks section on mccdaq.com/legal for more information about Measurement Computing trademarks. Other product and company names mentioned herein are trademarks or trade names of their respective companies.

© 2013 Measurement Computing Corporation. All rights reserved. No part of this publication may be reproduced, stored in a retrieval system, or transmitted, in any form by any means, electronic, mechanical, by photocopying, recording, or otherwise without the prior written permission of Measurement Computing Corporation.

Notice

Measurement Computing Corporation does not authorize any Measurement Computing Corporation product for use in life support systems and/or devices without prior written consent from Measurement Computing Corporation. Life support devices/systems are devices or systems that, a) are intended for surgical implantation into the body, or b) support or sustain life and whose failure to perform can be reasonably expected to result in injury. Measurement Computing Corporation products are not designed with the components required, and are not subject to the testing required to ensure a level of reliability suitable for the treatment and diagnosis of people.

Table of Contents

Preface
About this Manual **5**
Conventions 5
Where to find more information 5

Chapter 1
Introducing the USB-1208HS-2AO **6**
Functional block diagram 6

Chapter 2
Installing the USB-1208HS-2AO **7**
What comes with your shipment? 7
Hardware 7
Software 7
Documentation 7
Unpacking 7
Installing the software 7
Installing the hardware 7
Calibrating the USB-1208HS-2AO 8

Chapter 3
Functional Details **9**
Analog input acquisition modes 9
Software paced mode 9
Hardware paced mode 9
External components 9
USB connector 10
Activity LED 10
Status LED 10
Screw terminals 10
Signal connections 10
Analog input 10
Analog output 12
External clock I/O 12
Digital I/O 12
Counter input 14
Timer output 14
Trigger input 14
Retrigger 14
Power output 14
Ground 14

Chapter 4
Specifications **15**
Analog input 15
Analog output (USB-1208HS-2AO, USB-1208HS-4AO) 17
Digital input/output 17
External trigger 18
External clock input/output 18
Counters 19
Timer 19
Memory 19

Power 20
USB specifications 20
Environmental 21
Mechanical 21
Screw terminal connector and pinout 21
Declaration of Conformity 23

About this Manual

This document describes the USB-1208HS-2AO data acquisition device and lists device specifications.

Conventions

For more information

Text presented in a box signifies additional information related to the subject matter.

Caution! Shaded caution statements present information to help you avoid injuring yourself and others, damaging your hardware, or losing your data.

bold text — **Bold** text is used for the names of objects on a screen, such as buttons, text boxes, and check boxes.

italic text — *Italic* text is used for the names of manuals and help topic titles, and to emphasize a word or phrase.

Where to find more information

Additional information about USB-1208HS-2AO hardware is available on our website at www.mccdaq.com. You can also contact Measurement Computing Corporation by phone, fax, or email with specific questions.

- Knowledgebase: kb.mccdaq.com
- Phone: 508-946-5100 and follow the instructions for reaching Tech Support
- Fax: 508-946-9500 to the attention of Tech Support
- Email: techsupport@mccdaq.com

Introducing the USB-1208HS-2AO

The USB-1208HS-2AO is a high-speed analog input and digital I/O data acquisition device providing the following features:

- Eight 16-bit single-ended (SE) or four differential (DIFF) analog inputs
  Each input channel has a dedicated multiplexed 13-bit A/D converter for simultaneous sampling.
- Two 12-bit analog outputs
- One external clock input and one external output for analog inputs
- One external clock input and one external output for analog outputs
- One digital trigger input
- 16 individually configurable digital I/O channels
- Two 32-bit counter inputs
- One 32-bit timer output
- Screw terminals for field wiring connections

The device is powered by the +5 volt USB supply from your computer, and requires no external power.

The USB-1208HS-2AO is a USB 2.0 high-speed device supported under popular Microsoft® Windows® operating systems. The USB-1208HS-2AO is compatible with both USB 1.1 and USB 2.0 ports, (although the speed of the module maybe limited when using USB 1.1 ports).

Functional block diagram

USB-1208HS-2AO functions are illustrated in the block diagram shown here.

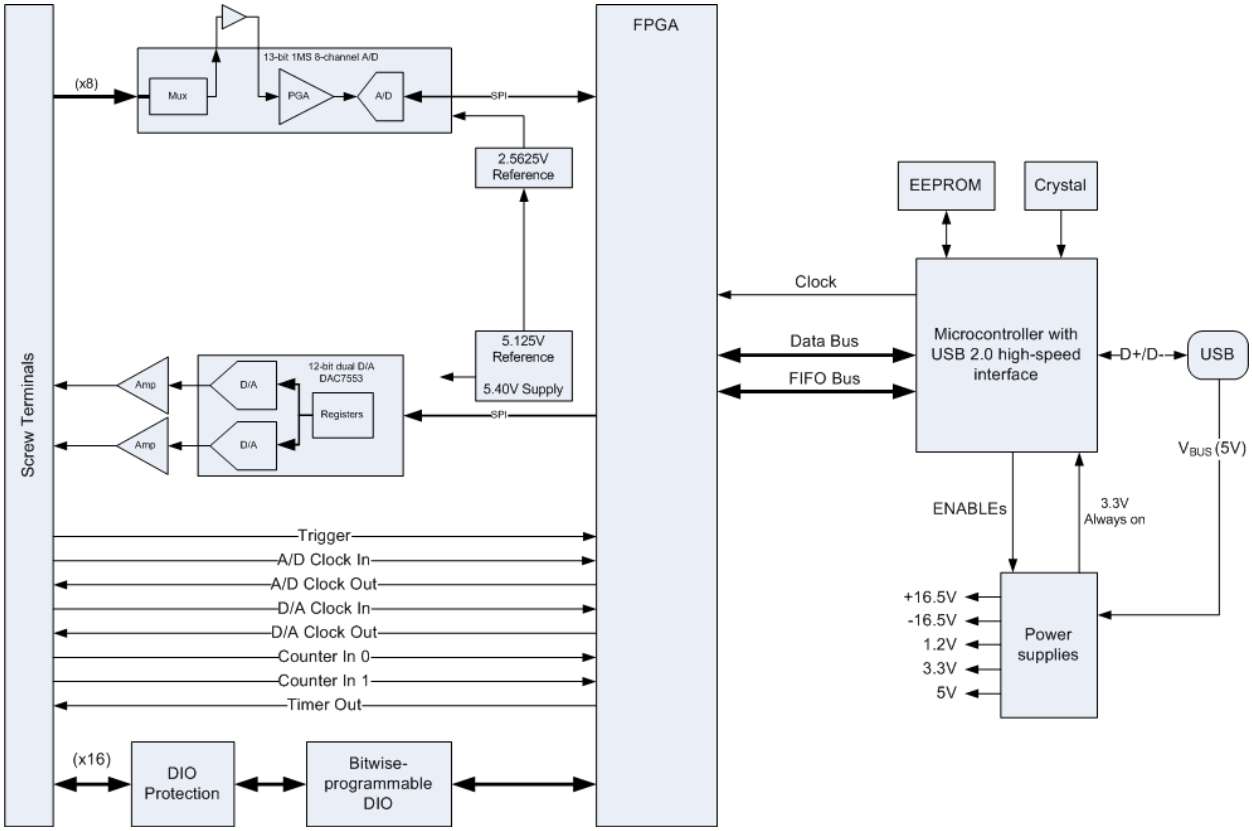

Figure 1. USB-1208HS-2AO functional block diagram

Installing the USB-1208HS-2AO

What comes with your shipment?

The following items are shipped with the USB-1208HS-2AO:

Hardware

- USB-1208HS-2AO
- USB cable

Software

- MCC DAQ CD

Documentation

In addition to this hardware user's guide, you should also receive the *Quick Start Guide*. This booklet provides an overview of the MCC DAQ software you received with the device, and includes information about installing the software. Please read this booklet completely before installing any software or hardware.

Unpacking

As with any electronic device, take care while handling to avoid damage from static electricity. Before removing the USB-1208HS-2AO from its packaging, ground yourself using a wrist strap or touch either the computer chassis or other grounded object to eliminate any stored static charge. If the device is damaged, notify Measurement Computing Corporation immediately by phone, fax, or email.

- Knowledgebase: kb.mccdaq.com
- Phone: 508-946-5100 and follow the instructions for reaching Tech Support
- Fax: 508-946-9500 to the attention of Tech Support
- Email: techsupport@mccdaq.com

For international customers, contact your local distributor. Refer to the International Distributors section on our web site at www.mccdaq.com/International.

Installing the software

Refer to the *Quick Start Guide* for instructions on installing the software on the MCC DAQ CD. This booklet is available in PDF at www.mccdaq.com/PDFmanuals/DAQ-Software-Quick-Start.pdf.

Installing the hardware

Be sure you are using the latest system software

Before you install the device, run Windows Update to update your operating system with the latest USB drivers.

Install the MCC DAQ software before you install your board

The driver needed to run your board is installed with the MCC DAQ software. Therefore, you need to install the software before you install your board. Refer to the *Quick Start Guide* for instructions.

To connect the USB-1208HS-2AO to your system, turn your computer on, and connect the USB cable to a USB port on your computer or to an external USB hub connected to your computer. The USB cable provides power and communication to the USB-1208HS-2AO.

When you connect the USB-1208HS-2AO for the first time, a **Found New Hardware** dialog opens when the operating system detects the device. The **Status** LED turns on; this indicates that communication is established between the device and the computer. Refer to Figure 2 on page 9 for the location of the Status LED. When the dialog closes, the installation is complete.

Caution! Do not disconnect any device from the USB bus while the computer is communicating with the device, or you may lose data and/or your ability to communicate with the USB-1208HS-2AO.

If the Status LED turns off

The Status LED turns off if communication is lost between the device and the computer. To restore communication, disconnect the USB cable from the computer and reconnect it. The Status LED should turn on.

Calibrating the USB-1208HS-2AO

The USB-1208HS-2AO is shipped fully calibrated. Calibration coefficients are stored in EEPROM.

Return the device to Measurement Computing Corporation when calibration is required. The normal calibration interval is once per year.

Functional Details

Analog input acquisition modes

The USB-1208HS-2AO can acquire analog input data in two basic modes – software paced and hardware paced.

Software paced mode

You can acquire one analog sample at a time in software paced mode. You initiate the A/D conversion by calling a software command. The analog value is converted to digital data and returned to the computer. You can repeat this procedure until you have the total number of samples that you want.

The throughput sample rate in software paced mode is system-dependent, and can range from 33 S/s to 4000 S/s.

Hardware paced mode

You can acquire data from up to eight channels in continuous scan mode. The analog data is continuously acquired, converted to digital values, and written to an onboard FIFO buffer on the USB-1208HS-2AO until you stop the scan. The FIFO buffer is serviced in blocks as the data is transferred from the USB-1208HS-2AO FIFO buffer to the memory buffer on your computer.

The maximum sampling rate is 1 MS/s aggregate over one-to-eight channels. You can start a continuous scan with either a software command or with an external hardware trigger event.

External components

The USB-1208HS-2AO has the following external components, as shown in Figure 2.

- Screw terminal banks
- LED indicators
- USB connector

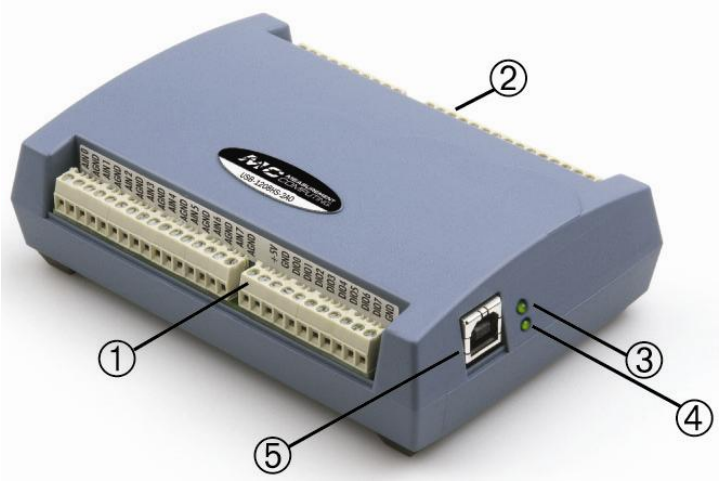

1	Screw terminal pins 1 to 28	4	Activity connector
2	Screw terminal pins 29 to 56	5	USB connector
3	Status LED		

Figure 2. External components

USB connector

The USB connector provides +5 V power and communication. No external power supply is required.

Activity LED

The Activity LED indicates the communication status of the USB-1208HS-2AO. It blinks when data is transferred, and is off when the device is not communicating. This LED uses up to 10 mA of current and cannot be disabled.

Status LED

The Status LED turns on when the device is detected and installed on the computer.

Screw terminals

Screw terminal connections are shown in shown in Figure 3.

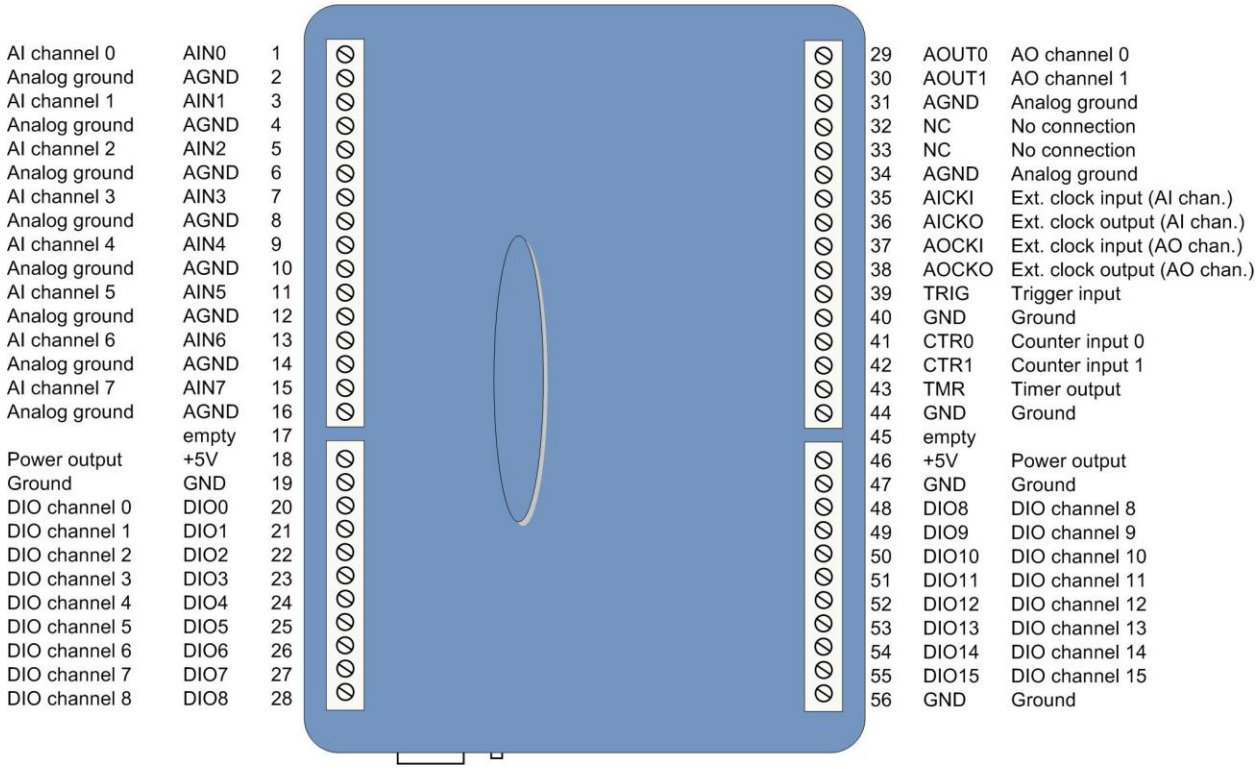

Figure 3. USB-1208HS-2AO screw terminal signals

Use 16 AWG to 30 AWG for signal connections.

Signal connections

Analog input

You can connect up to eight analog input connections to the screw terminals labeled **AIN0** through **AIN7**. Analog signals are referenced to analog ground (AGND).

Single-ended mode requires two wires:

- The wire carrying the signal to be measured connects to AINx.
- The second wire connects to AGND.

Differential mode requires two wires plus a ground reference:

- The wire carrying the positive portion of the differential signal to be measured connects to AINx.

- The wire carrying the negative portion of the differential signal to be measured connects to AIN(x+1).
- The analog ground reference wire connects to AGND.

The terminal configurations for single-ended and differential modes are shown in the table below.

Channel #	8 single-ended channels configuration 0	
	Vin+	Vin–
0	AIN0	AGND
1	AIN1	AGND
2	AIN2	AGND
3	AIN3	AGND
4	AIN4	AGND
5	AIN5	AGND
6	AIN6	AGND
7	AIN7	AGND

4 differential channels configuration	
Vin+	Vin–
AIN0	AIN1
AIN2	AIN3
AIN4	AIN5
AIN6	AIN7
-	-
-	-
-	-
-	-

In single-ended mode, the input voltage ranges are ±10 V, ±5 V, ±2.5 V, 0 to 10 V. In differential mode, the input voltage ranges are ±20 V, ±10 V, and ±5 V. The voltage level on each AINx input is limited to ±14 V

The following image depicts a voltage source connected to a USB-1208HS-2AO configured for SE mode.

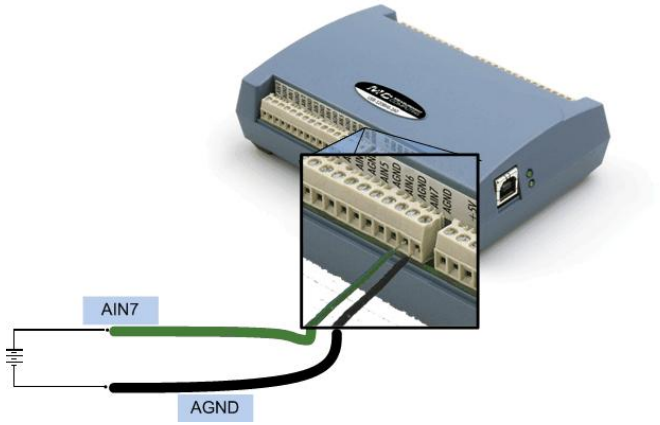

Figure 4. Single-ended measurement connection

The following image depicts a Wheatstone bridge signal source connected to a USB-1208HS-2AO configured for DIFF mode.

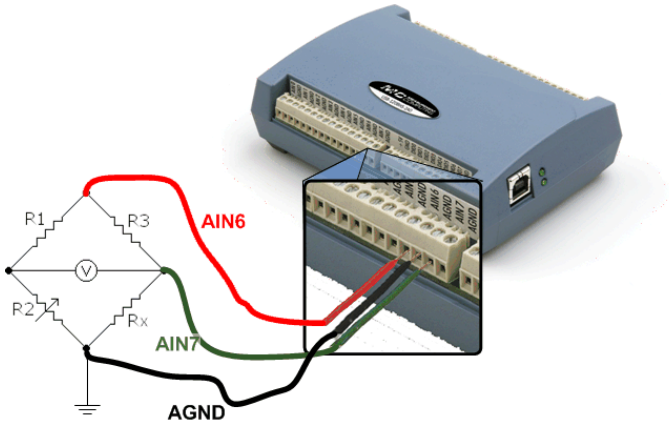

Figure 5. Differential measurement connection

For more information on analog signal connections

For more information on single-ended inputs, refer to the *Guide to DAQ Signal Connections* (this document is available on our web site at www.mccdaq.com/signals/signals.pdf).

Analog output

You can connect up to two analog output connections to screw terminals **AOUT0** and **AOUT1**. Refer to the pinout diagram on page 10 for the location of these pins.

Each channel can be software-paced at rates up to 5,000 updates per second (system-dependent), or hardware-paced at rates up to 1 MS/s.

Each analog output on the USB-1208HS-2AO has a fixed ±10 V output range. The outputs default to 0 V at power up.

External clock I/O

The USB-1208HS-2AO device provides one external clock input (**AICKI**) and one external clock output (**AICKO**) for analog inputs, and one external clock input (**AOCKI**) and one external clock output (**AOCKO**) for analog outputs.

You can connect an external clock signal to **AICKI** and/or **AOCKI**.

- When using an external clock, **AICKO** outputs the pulse generated from **AOCKI** , and **AOCKO** outputs the pulse generated from **AOCKI**
- When using the internal clock, **AICKO** outputs the ADC scan clock, and **AOCKO** outputs the DAC scan clock.

Digital I/O

You can connect up to 16 digital I/O lines to screw terminals **DIO0** through **DIO15**. The terminals have 47 kΩ resistors that you can configure for pull-up or down using an internal jumper. The default configuration is pull-down.

You can use the digital I/O terminals to detect the state of any TTL-level input. Refer to the schematic shown in Figure 6. If you set the switch to the +5 V input, DIO0 reads *TRUE* (1). If you move the switch to GND, DIO0 reads *FALSE* (0).

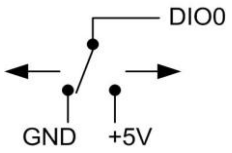

Figure 6. Schematic showing switch detection by digital channel DIO0

Pull-up/down configuration

Each of the 16 DIO bits on the USB-1208HS-2AO has a 47 kΩ pull-up/pull-down resistor. To configure these bits for either a +5 V pull-up or a 0 V pull-down option, open the device case to access the jumper labeled **W34**. The pull-up/pull-down voltage is common to all of the internal 47 kΩ resistors.

Complete the following steps to set the W34 jumper:

1. Turn over the USB-1208HS-2AO and rest it on its top on a flat, stable surface.
2. Peel off the four rubber feet on the bottom of the module to access the screws.
3. Remove the four screws shown in Figure 7 from the bottom of the device.

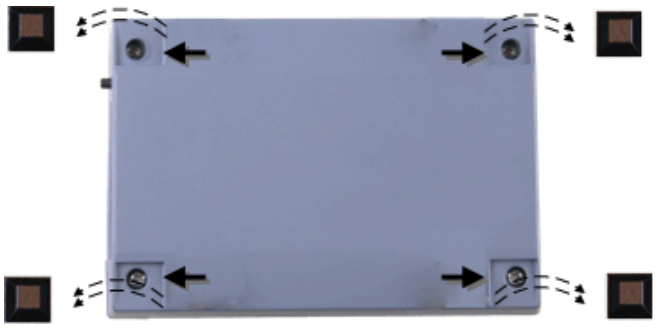

Figure 7. Location of screws connecting bottom and top sections of case

4. Holding both the top and bottom sections of the module, turn it back over, rest it on the surface, and carefully remove the top section of the case.
5. Set the jumper to either pull-up or pull-down (see Figure 8 and Figure 9).

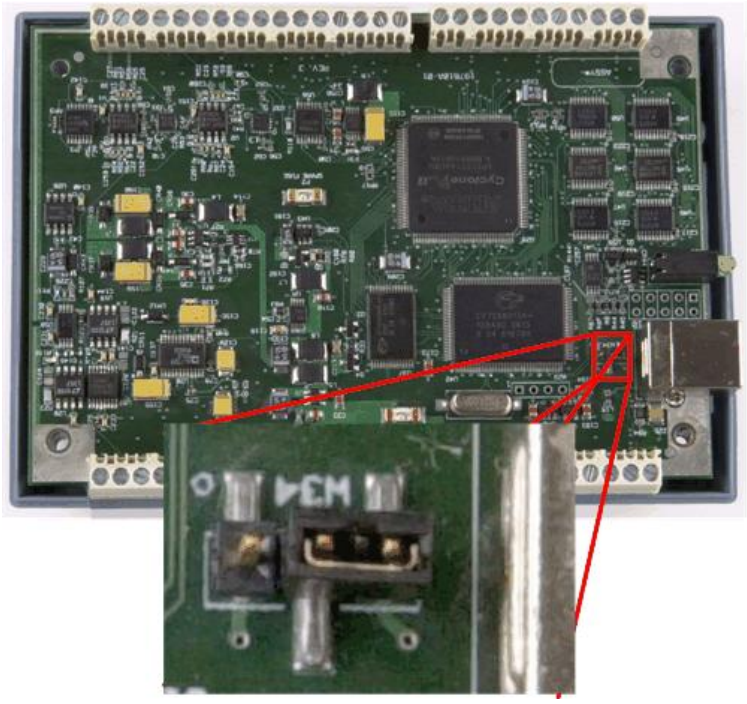

Figure 8. Location of W34 jumper (default pull-down setting shown)

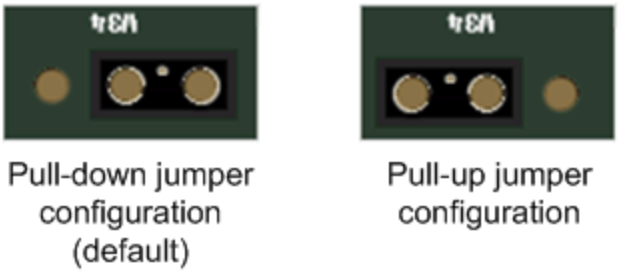

Figure 9. Pull-down and pull-up configurations

6. Replace the top section of the case, and then fasten it to the bottom section with the four screws.

For more information on digital signal connections

For general information regarding digital signal connections and digital I/O techniques, refer to the *Guide to DAQ Signal Connections* (available on our web site at www.mccdaq.com/signals/signals.pdf).

Counter input

CTR0 and **CTR1** provide connections to each 32-bit counter input channel (Each counter can count frequencies of up to 20 MHz.

Timer output

Use the **TMR** terminal to connect to the pulse width modulation (PWM) timer output. You can set the following timer output parameters through software:

- pulse frequency
- duty cycle (pulse width divided by the pulse period)
- number of pulses to generate
- time delay before starting the timer output after it's enabled
- resting state of the output (*idle high* or *idle low*)

The timer can generate a pulse output with a programmable frequency range of 0.00931 Hz up to 20 MHz.

Both the period and time delay ranges are 50 ns to 107.4 seconds.

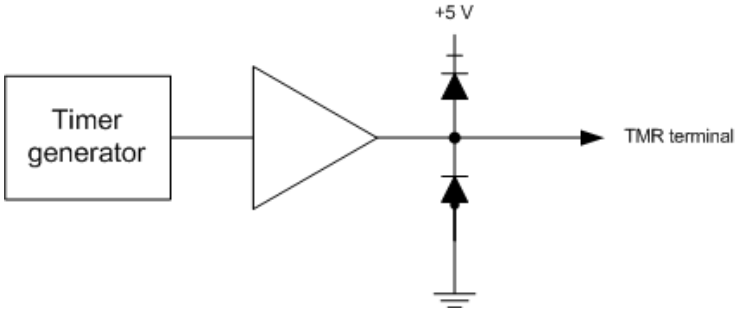

Figure 10. USB-1208HS-2AO PWM timer channel

Trigger input

The **TRIG** connection is an external digital trigger input. The trigger mode is software selectable for:

- Level-sensitive or edge-sensitive
- Rising or falling edge
- High or low level

The default setting at power up is edge sensitive, rising edge.

Retrigger

The acquisition uses the trigger settings for positive edge/negative edge and level-sensitive/edge-sensitive, but automatically re-arms the trigger after it is activated

Power output

You can use the two **+5V** connections to supply power to external devices or circuitry. These terminals can output up to 285 mA. Refer to the pinout diagram on page 10 for the location of this pin.

Caution! The **+5V** terminals are outputs. Do not connect to an external power supply or you may damage the USB-1208HS-2AO and possibly the computer.

Ground

The analog ground (**AGND**) connections provide a common ground for all analog I/O channels. The ground (**GND**) connections provide a common ground for the digital I/O, timer/counter I/O, timer, clock I/O, and the +5 V terminals.

Specifications

All specifications are subject to change without notice.
Typical for 25 °C unless otherwise specified.
Specifications in *italic text* are guaranteed by design.

Analog input

Table 1. Analog input specifications

Parameter	Condition	Specification
A/D converter		Analog Devices AD7329 13-bit successive approximation type
Input ranges	Software-selectable per channel	▪ Differential: ±20 V, ±10 V, ±5 V (The voltage level on each individual AIN input is limited to ±14 V.) ▪ SE: ±10 V, ±5 V, ±2.5 V, 0 V to 10 V
Number of channels		4 differential, 8 single-ended Software-selectable
Input configuration		Multiplexed
Channel gain queue	8 unique consecutive elements	Software-selectable range for each channel
Absolute maximum input voltage	*CHx IN to GND*	*±25 V max (power on)* *±12 V max (power off)*
Input impedance		35 MΩ min
Input bandwidth (–3 dB)	All input ranges	2 MHz typ
Input leakage current		±250 nA typ
Input capacitance		32 pf typ
Offset error drift		5 ppm/°C typ
Gain error drift		25 ppm/°C typ
Maximum working voltage (signal + common mode)	±20 V	±14 V
	±10 V	±11 V
	±5 V	±5.5 V
Sampling rate		1 S/s to 1 MS/s, software programmable
Sample clock source		Internal A/D clock or AICKI
Burst mode		Software-selectable, burst rate = 1µs
Throughput	Software paced	33 S/s to 4000 S/s typ, system dependent
	Scan to PC memory	1 MS/s max
Resolution		13 bits
A/D no missing codes (uncalibrated)	*Differential mode*	*13 bits*
	Single-ended mode	*12 bits*
CMRR	*60hz*	*74 dB typ*
Crosstalk	*SE mode, all ranges, 250 kHz input signal*	*–62 dB typ*
	Differential mode, all ranges, 250 kHz input signal	*–78 dB typ*

Table 2. Calibrated absolute accuracy

Range	Accuracy (mV)
±20 V (DIFF mode)	±9.55 typ, ±13.18 max
±10 V (DIFF mode)	±4.59 typ, ±6.23 max
±5 V (DIFF mode)	±2.25 typ, ±2.75 max
±10 V (SE mode)	±5.10 typ, ±8.06 max
±5 V (SE mode)	±2.63 typ, ±4.03 max
±2.5 V (SE mode)	±1.59 typ, ±2.70 max
0 – 10 V (SE mode)	±3.29 typ, ±5.13 max

Table 3 summarizes the noise performance for USB-1208HS Series hardware. Noise distribution is determined by gathering 50 kS with inputs tied to ground at the user connector. Samples are gathered at the maximum specified sampling rate of 1 MS/s.

Table 3. Noise performance

Range	Typical counts	LSBrms
±20 V (DIFF mode)	3	0.45
±10 V (DIFF mode)	3	0.45
±5 V (DIFF mode)	3	0.45
±10 V (SE mode)	5	0.91
±5 V (SE mode)	5	0.91
±2.5 V (SE mode)	5	0.91
0 – 10 V (SE mode)	5	0.91

Table 4. Input settling time in µs, typical

Condition	Range	±1 LSB	±4 LSB	±8 LSB
+ full-scale to –full-scale channel switch, same range to same range	±10 V	1.5	1.1	1.0
	±5 V	2.1	1.1	1.0
	±2.5 V	2.2	1.1	1.0
	0 V to 10 V	2.6	1.1	1.0

Analog output (USB-1208HS-2AO, USB-1208HS-4AO)

Table 5. Analog output specifications

Parameter	Condition	Specification
D/A converter		Texas Instruments DAC7553
Number of channels		USB-1208HS-2AO: 2 independent USB-1208HS-4AO: 4 independent
Resolution		12 bits
Output range	Calibrated	±10 V
	Uncalibrated	±10.2 V
Output transient	Host PC is reset, powered on, suspended, or a reset command is issued to device.	Duration: 3 ms typ Amplitude: 6 V p-p typ
D/A update rate	Software paced	33 to 5000 S/s typ, system dependent
	Hardware paced	1 MHz max (per channel)
Sample clock source		Internal D/A clock or AOCKI
Monotonicity		*12 bits*
Output current		±3 mA max per channel
Output short-circuit protection	Output connect to GND	Unlimited duration (10 mA typ)
Output coupling		DC
Power up and reset state		0 V
Output noise		*0.53 mV rms*
Settling time (to 0.05%)	*20 V output step, (R_L=5 kΩ, C_L=200 pf)*	*5 µS max*
Absolute accuracy		±0.1%
Slew rate		6.7 V/µs typ
Offset error drift		10 ppm/°C typ
Gain error drift		65 ppm/°C typ

Digital input/output

Table 6. Digital I/O specifications

Parameter	Specification
Digital type	CMOS
Number of I/O	16
Configuration	Each bit may be configured as input (power on default) or output
Pull-up configuration	The port has 47 kΩ resistors configurable as pull-up or pull-down with an internal jumper. The default setting is pull-down.
Digital I/O transfer rate (system-paced)	33 to 8000 port reads/writes or single bit reads/writes per second typ, system dependent.
Input high voltage	2.0 V min 5.5 V absolute max
Input low voltage	0.8 V max –0.5 V absolute min 0 V recommended min
Output high voltage	4.4 V min (IOH = –50 µA) 3.76 V min (IOH = –24 mA)
Output low voltage	0.1 V max (IOL = 50 µA) 0.44 V max (IOL = 24 mA)
Output current	±24 mA max per terminal (see "Power"section for additional information)

External trigger

Table 7. External trigger specifications

Parameter	Specification
Trigger source	TRIG input
Trigger mode	Software-selectable for edge or level sensitive, rising or falling edge, high or low level. Power on default is edge sensitive, rising edge.
Trigger latency	1 µs + 1 clock cycle max
Trigger pulse width	100 ns min
Input type	Schmitt trigger, 33 Ω series resistor and 47 kΩ pull-down to ground
Schmitt trigger hysteresis	0.4 V to 1.2 V
Input high voltage	2.2 V min 5.5 V absolute max
Input low voltage	1.5 V max –0.5 V absolute min 0 V recommended min

External clock input/output

Table 8. External clock I/O specifications

Parameter	Specification
Terminal names	USB-1208HS: AICKI, AICKO USB-1208HS-2AO: AICKI, AICKO, AOCKI, AOCKO USB-1208HS-4AO: AICKI, AICKO, AOCKI, AOCKO
Terminal types	AxCKI: Input, active on rising edge AxCKO: Output, power on default is 0 V, active on rising edge
Terminal descriptions	AxCKI: Receives sampling clock from external source AxCKO: Outputs the internal sampling clock (D/A or A/D clock or D/A clock, if supported) or pulse generated from AxCKI when in external clock mode
Input clock rate	1 MHz max
Clock pulse width	AxCKI: 400 ns min AxCKO: 400 ns min
Input type	Schmitt trigger, 33 Ω series resistor, 47 kΩ pull-down to ground
Schmitt trigger hysteresis	0.4 V to 1.2 V
Input high voltage	2.2 V min 5.5 V absolute max
Input low voltage	1.5 V max –0.5 V absolute min 0 V recommended min
Output high voltage	4.4 V min (IOH = –50 µA) 3.76 V min (IOH = –24 mA)
Output low voltage	0.1 V max (IOL = 50 µA) 0.44 V max (IOL = 24 mA)
Output current	±24 mA max per terminal (see "Power" section for additional information)

Counters

Table 9. Counter specifications

Parameter	Specification
Counter terminal names	CTR0, CTR1
Counter type	Event counter
Number of channels	2
Input type	Schmitt trigger, 33 Ω series resistor, 47 kΩ pull-down to ground
Schmitt trigger hysteresis	0.4 V to 1.2 V
Input high voltage	2.2 V min 5.5 V absolute max
Input low voltage	1.5 V max –0.5 V absolute min 0 V recommended min
Resolution	32 bits
Maximum input frequency	20 MHz
Counter read/write rates (software paced)	33 to 8000 reads/writes per second typ, system dependent
High pulse width	*25 ns min*
Low pulse width	*25 ns min*

Timer

Table 10. Timer specifications

Parameter	Specification
Timer terminal name	TMR
Timer type	PWM output with count, period, delay, and pulse width registers
Output value	Default state is idle low with pulses high, software-selectable output invert
Internal clock frequency	40 MHz
Register widths	32 bits
High pulse width	*20 ns min*
Low pulse width	*20 ns min*
Output high voltage	4.4 V min (IOH = –50 µA) 3.76 V min (IOH = –24 mA)
Output low voltage	0.1 V max (IOL = 50 µA) 0.44 V max (IOL = 24 mA)
Output current	±24 mA max per pin (see "Power" section for additional information)

Memory

Table 11. Memory specifications

Parameter	Specification
Data FIFO	USB-1208HS: 4 kS analog input USB-1208HS-2AO: 4 kS analog input/4 kS analog output USB-1208HS-4AO: 4 kS analog input/4 kS analog output
Non-volatile memory	32 KB (16 KB firmware storage, 16 KB calibration/user data)

Power

Table 12. Power specifications

Parameter	Condition	Specification
Operating modes		Bus-powered, USB 5 V supply
Supply current (see Note 1)	Suspend mode	<2.5 mA
	Enumeration	<100 mA
	Run mode	<500 mA
Power consumption excluding analog and digital outputs	Run mode	USB-1208HS: 1.05 W max (210 mA input current) USB-1208HS-2AO: 1.125 W max (225 mA input current) USB-1208HS-4AO: 1.175 W max (235 mA input current)
Power available for +5 V, AICKO, AOCKO, TMR, analog outputs, and digital I/O	Run mode	USB-1208HS: 1.45 W max USB-1208HS-2AO: 1.375 W max USB-1208HS-4AO: 1.325 W max The total power consumption for all external loads must be less than this value, and each load must meet the individual specification for the terminal.
Digital output power calculation		Power per output = Iout × 5 V (for example, @ 24 mA, P = 0.024 × 5 = 120 mW / output)
Analog output power calculation (USB-1208HS-2AO/ USB-1208HS-4AO)		Power per output = (Iout × 16.5 V) / 0.78 (for example, @ 3 mA, P = (0.003 × 16.5) / 0.80 = 63.5 mW/output)
+5 V output power calculation		Power (W) = Iout × 5 V
+5 V output voltage range (see Note 2)	Run mode	4.25 V min, 5.25 V max
	Suspend mode, enumeration	0 V
+5 V output current	Run mode, no other output loads	USB-1208HS: 290 mA max (1.45 W) USB-1208HS-2AO: 275 mA max (1.375 W) USB-1208HS-4AO: 265 mA max (1.325 W)
Fuses	On USB supply	0452.750 - Littelfuse 0.750A NANO2® Slo-Blo® Subminiature Surface Mount Fuse. Spare fuse mounted in holder on PCB.

Note 1: This is the total current consumption for USB-1208HS Series hardware, including +5 V, digital output and analog output currents (if supported).

Note 2: Output voltage range assumes input power is within specified limits.

USB specifications

Table 13. USB specifications

Parameter	Specification
USB device type	USB 2.0 (high-speed)
USB device compatibility	USB 1.1, 2.0
USB cable length	5 m (16.40 ft) max
USB cable type	A-B cable, UL type AWM 2725 or equivalent (min 24 AWG VBUS/GND, min 28 AWG D+/D–).

Environmental

Table 14. Environmental specifications

Parameter	Specification
Operating temperature range	0 °C to 50 °C
Storage temperature range	–40 °C to 85 °C
Humidity	0% to 90% non-condensing

Mechanical

Table 15. Mechanical specifications

Parameter	Specification
Dimensions (L × W × H)	5.00 × 3.53 × 1.40 in. (127 × 89.9 × 35.6 mm)

Screw terminal connector and pinout

Table 16. Connector specifications

Parameter	Specification
Connector type	Screw terminal
Wire gauge range	16 AWG to 30 AWG

Table 17. Single-ended mode pinout

Pin	Signal name	Pin	Signal name
1	AIN0	29	AOUT0[1]
2	AGND	30	AOUT1[1]
3	AIN1	31	AGND
4	AGND	32	AOUT2[2]
5	AIN2	33	AOUT3[2]
6	AGND	34	AGND
7	AIN3	35	AICKI
8	AGND	36	AICKO
9	AIN4	37	AOCKI[3]
10	AGND	38	AOCKO[3]
11	AIN5	39	TRIG
12	AGND	40	GND
13	AIN6	41	CTR0
14	AGND	42	CTR1
15	AIN7	43	TMR
16	AGND	44	GND
17	empty	45	empty
18	+5V	46	+5V
19	GND	47	GND
20	DIO0	48	DIO8
21	DIO1	49	DIO9
22	DIO2	50	DIO10
23	DIO3	51	DIO11
24	DIO4	52	DIO12
25	DIO5	53	DIO13
26	DIO6	54	DIO14
27	DIO7	55	DIO15
28	GND	56	GND

[1] USB-1208HS-2AO and USB-1208HS-4AO only; NC (no connection) on the USB-1208HS.

[2] USB-1208HS-4AO only; NC (no connection) on the USB-1208HS AND USB-1208HS-2AO.

[3] USB-1208HS-2AO and USB-1208HS-4AO only; NC (no connection) on the USB-1208HS.

Table 18. Differential mode pinout

Pin	Signal name	Pin	Signal name
1	AIN0 +	29	AOUT0[1]
2	AGND	30	AOUT1[1]
3	AIN0 -	31	AGND
4	AGND	32	AOUT2[2]
5	AIN1 +	33	AOUT3[2]
6	AGND	34	AGND
7	AIN1 -	35	AICKI
8	AGND	36	AICKO
9	AIN2 +	37	AOCKI[3]
10	AGND	38	AOCKO[3]
11	AIN2 -	39	TRIG
12	AGND	40	GND
13	AIN3 +	41	CTR0
14	AGND	42	CTR1
15	AIN3 -	43	TMR
16	AGND	44	GND
17	empty	45	empty
18	+5V	46	+5V
19	GND	47	GND
20	DIO0	48	DIO8
21	DIO1	49	DIO9
22	DIO2	50	DIO10
23	DIO3	51	DIO11
24	DIO4	52	DIO12
25	DIO5	53	DIO13
26	DIO6	54	DIO14
27	DIO7	55	DIO15
28	GND	56	GND

[1] USB-1208HS-2AO and USB-1208HS-4AO only; NC (no connection) on the USB-1208HS.

[2] USB-1208HS-4AO only; NC (no connection) on the USB-1208HS AND USB-1208HS-2AO.

[3] USB-1208HS-2AO and USB-1208HS-4AO only; NC (no connection) on the USB-1208HS.

Declaration of Conformity

Manufacturer: Measurement Computing Corporation
Address: 10 Commerce Way
Suite 1008
Norton, MA 02766
USA

Category: Electrical equipment for measurement, control and laboratory use.

Measurement Computing Corporation declares under sole responsibility that the products

USB-1208HS-2AO

to which this declaration relates is in conformity with the relevant provisions of the following standards or other documents:

EC EMC Directive 2004/108/EC: General Requirements, EN 61326-1:2006 (IEC 61326-1:2005).

Emissions:

- EN 55011 (2007) / CISPR 11(2003): Radiated emissions: Group 1, Class A
- EN 55011 (2007) / CISPR 11(2003): Conducted emissions: Group 1, Class A

Immunity: EN 61326-1:2006, Table 3.

- IEC 61000-4-2 (2001): Electrostatic Discharge immunity.
- IEC 61000-4-3 (2002): Radiated Electromagnetic Field immunity.

To maintain compliance to the standards of this declaration, the following conditions must be met.

- The host computer, peripheral equipment, power sources, and expansion hardware must be CE compliant.
- All I/O cables must be shielded, with the shields connected to ground.
- I/O cables must be less than 3 meters (9.75 feet) in length.
- The host computer must be properly grounded.
- The host computer must be USB 2.0 compliant.
- Equipment must be operated in a controlled electromagnetic environment as defined by Standards EN 61326-1:2006, or IEC 61326-1:2005.

Note: Data acquisition equipment may exhibit noise or increased offsets when exposed to high RF fields (>1V/m) or transients.

Declaration of Conformity based on tests conducted by Chomerics Test Services, Woburn, MA 01801, USA in December, 2008. Test records are outlined in Chomerics Test Report #EMI5217.08.

We hereby declare that the equipment specified conforms to the above Directives and Standards.

Carl Haapaoja, Director of Quality Assurance

Measurement Computing Corporation
10 Commerce Way
Suite 1008
Norton, Massachusetts 02766
(508) 946-5100
Fax: (508) 946-9500
E-mail: info@mccdaq.com
www.mccdaq.com