Data Acquisition Fundamentals:

Making Accurate Temperature Measurements with Thermocouples, Thermistors and RTD Sensors

MEASUREMENT COMPUTING™

White Paper by Measurement Computing, Inc.

Introduction

Temperature is the most common physical measurement engineers and scientists make. From highly accelerated life testing (HALT)/highly accelerated stress screening (HASS) to dynamometer test cells and microprocessor validation, temperature measurements play a key role in a vast array of applications. While modern systems have addressed the complex hurdles of temperature measurement and simplified the process for users, understanding the theories, operation, and inherent pitfalls of temperature measurements is still helpful.

This white paper covers these topics in-depth for the most widely-used temperature transducers: thermocouples, resistance temperature detectors (RTDs), and thermistors. Each sensor has advantages and disadvantages based on the application needs (see Table 1).

	Thermocouple	RTD	Thermistor
Temperature range	Best (-200 °C to 1700 °C)	Better (-200 °C to 800 °C)	Good (-55 °C to 300 °C)
Accuracy	Good	Better	Best
Cost	Best	Good	Better
Sensitivity	Good	Better	Best

Table 1: Common Temperature Transducers.

Thermocouple sensors, the most common temperature transducers, are inexpensive, cover a wide temperature range, and are rugged, but they are the least accurate of the three temperature transducers. RTDs are more expensive than thermocouples but offer greater accuracy and stability. Thermistors are less expensive than RTDs, more accurate than thermocouples, and offer excellent sensitivity, but they operate over a fairly small temperature range.

While each type of transducer has advantages and disadvantages depending on the application, each also presents different requirements for a measurement system. The thermocouple, for example, is a simple device – two wires of different metals welded together at one end. But this “simple” device poses many challenges to a measurement system, including the need for amplification, filtering, and cold-junction compensation (CJC).

RTDs and thermistors pose different challenges. Because they are both resistive devices, these measurement sensors need a current source to convert resistance to a voltage. RTDs also require circuitry to maximize accuracy and sensitivity.

Understanding the fundamentals of each temperature transducer allows users to choose the best transducer and the right measurement for an application.

Thermocouple Temperature Measurement

The Gradient Nature of Thermocouples

Thermocouples are the most widely used yet least-understood of all temperature measuring devices. When connected in pairs, they are simple and efficient sensors that output an extremely small DC voltage proportional to the temperature difference between the two junctions in a closed thermoelectric circuit (Refer to Figure 1).

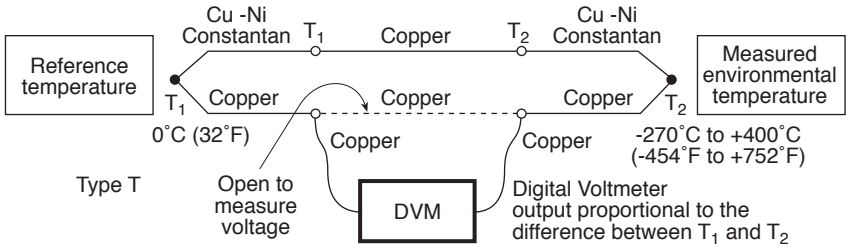

Fig. 1: Type T Basic Thermocouple Circuit. A classic thermocouple measurement system requires two sensors: one for the environment being measured and the other for a reference junction, normally held to 0 ˚C (32 ˚F).

Thomas Seebeck discovered that an electric current is induced in a conductive material when exposed to a temperature gradient.

One junction is normally held at a constant reference temperature while the opposite junction is immersed in the environment to be measured. The principle of operation depends on the unique value of thermal electromotive force (EMF) measured between the open ends of the leads and the junction of two dissimilar metals held at a specific temperature. Named after its discoverer, Thomas Johann Seebeck, the principle is called the "Seebeck effect." The amount of voltage present at the open ends of the sensor and the range of temperatures the device can measure depend on the Seebeck

coefficient, which in turn depends on the chemical composition of the thermocouple wire. The Seebeck voltage is calculated from the following equation:

$\Delta eAB = \alpha \Delta T$

Where:

eAB = Seebeck voltage

T = temperature at the thermocouple junction

α = Seebeck coefficient

Δ = a small change in voltage corresponding to a small change in temperature

Equation 1: Seebeck Voltage.

Thermocouple junctions alone do not generate voltages. The voltage or potential difference that develops at the output (open) end is a function of both the temperature of the junction T_1 and the temperature of the open end T_1'. T_1' must be held at a constant temperature, such as 0 ˚C, to ensure that the open-end voltage changes in proportion to the temperature changes in T_1. In principle, a thermocouple can be made from any two dissimilar metals, such as nickel and iron. In practice, however, only a few thermocouple types have become standard because their temperature coefficients are highly repeatable, they are rugged, and they output relatively small voltages. The most common thermocouple types are called J, K, T, and E, followed by N28, N14, S, R, and B (Refer to Table 2). In theory, the junction temperature can be inferred from the Seebeck voltage by consulting standard tables. In practice, however, this voltage cannot be used directly because the thermocouple wire connection to the copper terminal at the measurement device itself constitutes a thermocouple junction (unless the thermocouple lead is also copper) and produces another thermal EMF that requires compensation.

Contrary to popular belief, thermocouple junctions alone do not generate voltages.

People using the Seebeck effect should keep in mind that they are measuring the temperature difference between the two ends. A reference point must be established to turn the relative measurement of a thermocouple temperature gradient into the absolute measurement at the tip of the thermocouple.

In early measurement systems, the most convenient reference point was an ice bath, which provided a consistent 0 °C reference. In modern measurement systems, ice baths are replaced with temperature sensing ICs and software compensation. To better explain thermocouple theory, this paper will explain the classic ice-bath method first and then discuss software compensation methods later.

A cold-junction thermocouple immersed in an ice bath and connected in series with the measuring thermocouple is the classical method used to compensate for the EMF at the instrument terminals (Refer to Table 2).

Type	Metal +	Metal -	Standard color code +	Standard color code -	Ω/double foot 20 AWG	Seebeck coefficient S(µV/ ˚C)	@ T(˚C)	˚C standard wire error	NBS specified materials range* (˚C)
B	Platinum-6% Rhodium	Platinum-30% Rhodium	—		0.2	6	600	4.4 to 8.6	0 to 1820**
E	Nickel-10% Chromium	Constantan	Violet	Red	0.71	58.5	0	1.7 to 4.4	-270 to 1000
J	Iron	Constantan	Violet/ White	Red	0.36	50.2	0	1.1 to 2.9	-210 to 760
K	Nickel- 10% Chromium	Nickel	Yellow	Red	0.59	39.4	0	1.1 to 2.9	-270 to 1372
N (AWG 14)	Nicrosil	Nisil	—		—	39	600	—	0 to 1300
N (AWG 28)	Nicrosil	Nisil	—		—	26.2	0	—	-270 to 400
R	Platinum-13% Rhodium	Platinum	—		0.19	11.5	600	1.4 to 3.8	-50 to 1768
S	Platinum-10% Rhodium	Platinum	—		0.19	10.3	600	1.4 to 3.8	-50 to 1768
T	Copper	Constantan	Blue	Red	.30	38	0	0.8 to 2.9	-270 to 400
W-Re	Tungsten- 5% Rhenium	Tungsten-26% Rhenium	—		—	19.5	600	—	0 to 2320

* Material range is for 8 AWG wire; decreases with deceasing wire size ** Type B double-valued below 42 ˚C – curve fit specified only above 130 ˚C

Table 2: Common Thermocouple Types. The National Institute of Standards and Technology (NIST) thermocouple EMF tables publish the EMF output of a thermocouple based on a corresponding reference thermocouple junction held at 0 ˚C.

Cold-Junction Compensation

In this example, both copper leads connect to the instrument's input terminals. An alternative method uses a single thermocouple with the copper/constantan connection immersed in the reference ice bath, which is also represented in Figure 2. The thermocouple junction J_2 in the ice bath contributes a small EMF that subtracts from the thermocouple J_1 EMF, so the voltage measured at the instrument or data-acquisition system input terminals corresponds accurately to the NIST tables. Likewise, the copper wires connected to the copper terminals on the instrument's isothermal block do not need compensation because they are all copper at the same temperature. The voltage reading comes entirely from the constantan/copper thermocouple wire.

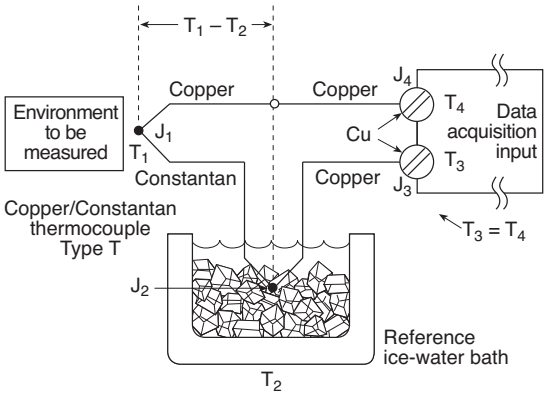

Fig. 2: Classical Ice Bath Method 1. This method uses 2 type T thermocouples to ensure that the copper measurement system does not create an additional junction.

The above example is a special case, however, because one lead of the type T thermocouple is copper. A constantan/iron thermocouple, on the other hand, needs further consideration (Refer to Figure 3). Here, J_2 in the ice bath is held constant, and J_1 measures the environment. Although J_3 and J_4 are effectively thermocouple junctions, they are at the same temperature on the isothermal block, so they output equal and opposite voltages and thus cancel.

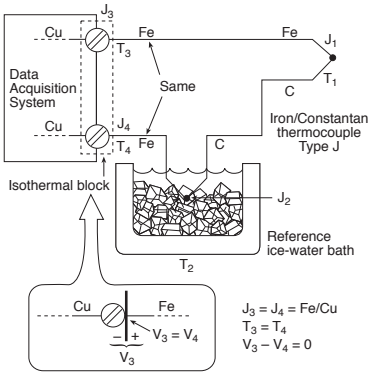

Fig. 3: Classical Ice Bath Method 2. In this method, the thermocouple wire and measurement system uses dissimilar metals (Fe and Cu). To minimize measurement error, an isothermal block is needed to eliminate temperature gradients between J_3 and J_4.

The net voltage is then the thermocouple J_1 output representing T_1, calibrated to the NIST standard table. If the I/O block were not isothermal, copper wire leads would be added between the input terminal and the copper/iron leads, and the copper/iron junctions (J_3 and J_4) would be held in an ice bath as well, as shown in Figure 4.

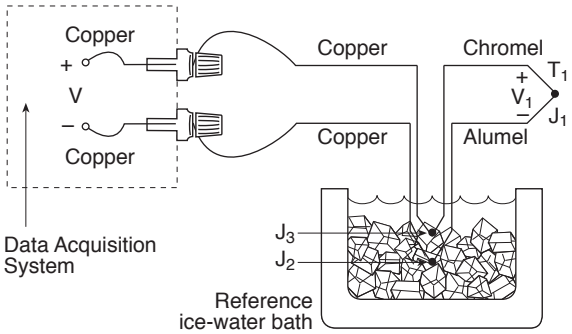

Fig. 4: Classic Ice Bath Method 3. Because the thermocouple leads and the measurement system both use copper, an isothermal block is not needed. In this method, the copper temperature gradient is unaffected by the Data Acquisition System.

Software Compensation

Ice baths and multiple-reference junctions in large test fixtures can be difficult to set up and maintain, but fortunately they all can be eliminated. The EMF correction needed at the terminals can be referenced and compensated to the NIST standards through computer software.

When the ice baths are eliminated, cold-junction compensation is still necessary to obtain accurate thermocouple measurements. The software has to read the isothermal block temperature. One widely used technique is a thermistor mounted close to the isothermal terminal block and connected to the external thermocouple leads. No temperature gradients are allowed in the region containing the thermistor and terminals. The type of thermocouple used is preprogrammed for its respective channel, and the dynamic input data for the software includes the isothermal block temperature and the measured environmental temperature. The software uses the isothermal block temperature and the type of thermocouple to calculate the temperature of the sensor using a polynomial equation. The method allows many thermocouple channels of various types to be connected simultaneously while the computer automatically handles all of the conversions.

In modern systems, software compensation has eliminated the need for an ice bath to make accurate thermocouple measurements

Thermocouple Temperature Measurement Pitfalls

Noisy Environments

Because thermocouples generate a relatively small voltage, noise is always an issue. The most common sources of noise are the AC power lines (50 Hz or 60 Hz). Because the bandwidth of most temperature systems is lower than 50 Hz, a simple filter in each channel can reduce the interfering AC line noise. Common filters include passive filters, using only resistors and capacitors, and active filters using these components along with op amps. While a passive RC filter is inexpensive and works well for analog circuits, it's not recommended for a multiplexed front end because the multiplexer load can change the filter characteristics. An active filter composed of an op amp and a few passive components works well in multiplexed systems, but it's more expensive and complex. Additionally, each channel using an active filter must be calibrated to compensate for gain and offset errors (Refer to Figure 5).

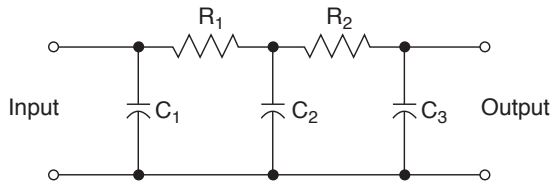

Fig. 5A: Passive Filters. Passive filters come in a variety of configurations to suit the application. They are built in single or multiple sections to provide increasingly steeper slopes for faster roll-off.

The most common sources of noise in thermocouples are from 50Hz or 60Hz AC power lines.

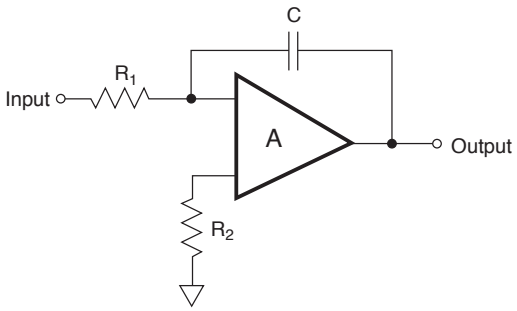

Fig. 5B: Active Filters. An active filter easily eliminates the most common sources of electrical noise that competes with the thermocouple signal, such as the interference from 50/60 Hz supply lines.

Additional Concerns

Thermocouple Assembly

Thermocouples are twisted pairs of dissimilar wires soldered or welded together at the junction. When not assembled properly, they can produce a variety of errors. For example, wires should not be twisted together to form a junction. They should be soldered or welded; however, solder is sufficient only at relatively low temperatures, usually less than 200 ˚C. Soldering also introduces a third metal, such as a lead/tin alloy, but it will not likely introduce errors if both sides of the junction are at the same temperature. Welding the junction is preferred, but must be done without changing the wire characteristics. Commercially manufactured thermocouple junctions are typically joined with capacitive discharge welders to ensure uniformity and prevent contamination.

Thermocouples can become uncalibrated and measure the wrong temperature when the physical makeup of the wire is altered and does not meet the NIST standards. The change can come from a variety of sources, including exposure to temperature extremes, cold working the metal, stress placed on the cable when installed, vibration, or temperature gradients.

The output of the thermocouple also can change when its insulation resistance decreases as the temperature increases. The change is exponential and can produce a leakage resistance so low that it bypasses an open-thermocouple wire detector circuit. In high-temperature applications using thin thermocouple wire, the insulation can degrade to the point of forming a virtual junction as illustrated in Figure 6. The data acquisition system then measures the output voltage of the virtual junction at T_1 instead of the true junction at T_2.

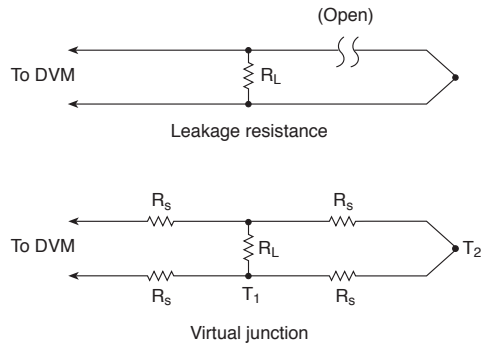

Fig. 6: Virtual Junction. A short circuit or an insulation failure between the leads of a thermocouple can form an unwanted, inadvertent thermocouple junction called a virtual junction.

In addition, high temperatures can release impurities and chemicals within the thermocouple wire insulation that diffuse into the thermocouple metal and change its characteristics. This causes the temperature versus voltage relationship to deviate from the published values. Choosing protective insulation intended for high-temperature operation can minimize these problems.

Thermocouple Isolation

Thermocouple isolation reduces noise and errors typically introduced by ground loops. This is especially troublesome where numerous thermocouples with long leads fasten directly between an engine block (or another large metal object) and the thermocouple-measurement instrument. They may reference different grounds, and without isolation, the ground loop can introduce relatively large errors in the readings.

Auto-Zero Correction

Subtracting the output of a shorted channel from the measurement channel readings can minimize the effects of time and temperature drift on the system's analog circuitry. Although extremely small, this drift can become a significant part of the low-level voltage supplied by a thermocouple.

One effective method of subtracting the offset due to drift is done in two steps. First, the internal channel sequencer switches to a reference node and stores the offset error voltage on a capacitor. Next, as the thermocouple channel switches onto the analog path, the stored error voltage is applied to the offset correction input of a differential amplifier and automatically nulls out the offset (Refer to Figure 7).

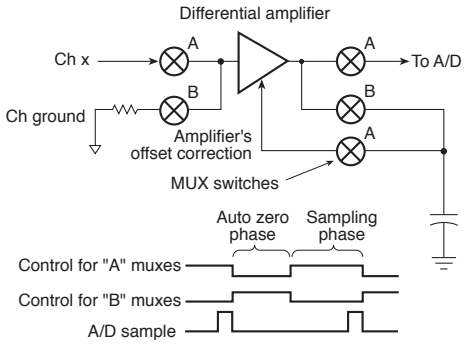

Fig. 7: Auto-Zero Correction. Auto-zero correction compensates for analog circuitry drift over time and temperature. Although small, the offset could approach the magnitude of the thermocouple signal.

Open Thermocouple Detection

Detecting open thermocouples easily and quickly is especially critical in systems with many channels. Thermocouples tend to break or increase resistance when exposed to vibration, poor handling, and long service time. A simple open-thermocouple detection circuit consists of a small capacitor placed across the thermocouple leads and driven with a low-level current. The low impedance of the intact thermocouple presents a virtual short circuit to the capacitor, so it cannot charge. When a thermocouple opens or significantly changes resistance, the capacitor charges and drives the input to one of the voltage rails, which indicates a defective thermocouple (Refer to Figure 8).

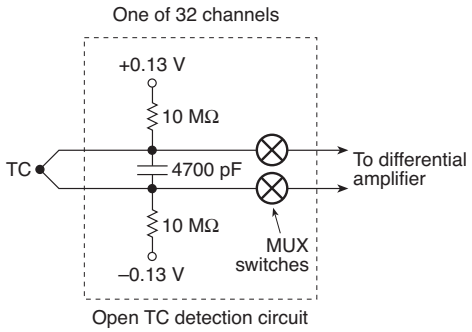

Fig. 8: Open Thermocouple Detector. The thermocouple provides a short-circuit path for DC around the capacitor, preventing it from charging through the resistors. When the thermocouple opens—due to rough handling or vibration—the capacitor charges and drives the input amplifier to the power supply rails, signaling a failure.

Galvanic Action

Some thermocouple insulating materials contain dyes that form an electrolyte in the presence of water. The electrolyte generates a galvanic voltage between the leads, which in turn produces output signals hundreds of times greater than the net open-circuit voltage. Thus, good installation practice calls for shielding the thermocouple wires from high humidity and all liquids to avoid such problems.

Thermal Shunting

An ideal thermocouple does not affect the temperature of the device being measured, but a real thermocouple has mass that when added to the device under test can alter the temperature measurement. Thermocouple mass can be minimized with small-diameter wire, but smaller wire is more susceptible to contamination, annealing, strain, and shunt impedance. One solution to help ease this problem is to use the small thermocouple wire at the junction but add special, heavier thermocouple extension wire to cover long distances. The material used in this extension wire has net open-circuit voltage coefficients similar to specific thermocouple types. Its series resistance is relatively low over long distances, and it can be pulled through conduits easier than premium-grade thermocouple wire. In addition to its practical size advantage, extension wire is less expensive than standard thermocouple wire.

Despite these advantages, extension wire generally operates over a much narrower temperature range and is more likely to receive mechanical stress. For these reasons, the temperature gradient across the extension wire should be kept to a minimum to ensure accurate temperature measurements.

Improving Wire Calibration Accuracy

Thermocouple wire is manufactured to NIST specifications. Often, these specifications can be met more accurately when the wire is calibrated onsite against a known temperature standard.

RTD Temperature Measurement

RTD Sensor Basics

Resistance temperature detectors (RTDs) are composed of metals with a high positive temperature coefficient of resistance. Most RTDs are simply wire wound or thin film resistors made of material with a known resistance versus temperature relationship. The accuracy of RTDs varies widely; the most accurate are also used as NIST temperature standards.

Platinum is one of the most widely used materials for RTDs.

Platinum is one of the most widely used materials for RTDs. Platinum RTD resistances range from about 10 Ω for a birdcage configuration to 10 kΩ for a film type, but the most common is 100 Ω at 0 ˚C. Commercial platinum wire has a standard temperature coefficient, α, of 0.00385 Ω/Ω/˚C, and chemically pure platinum has a coefficient of 0.00392 Ω/Ω/˚C.

The following equation shows the relationship between the sensor's relative change in resistance with a change in temperature at a specific α and nominal sensor resistance.

$$\Delta R = \alpha R_o \Delta T$$

Where:

α = temperature coefficient, Ω/Ω/ ˚C

R_o = nominal sensor resistance at 0 ˚C, Ω

ΔT = change in temperature from 0 ˚C, C

Equation 2: RTD Temperature Coefficient.

A nominal 100 Ω platinum wire at 0 ˚C changes resistance, either plus or minus, over a slope of 0.385 Ω/ ˚C. For example, a 10 ˚C increase in temperature changes the output of the sensor from 100 Ω to 103.85 Ω, and a 10 ˚C decrease in temperature changes the RTD resistance to 96.15 Ω.

Because RTD sensor resistances and temperature coefficients are relatively small, lead wires with a resistance as low as 10 Ω and relatively high temperature coefficients can change the calibration of the data acquisition system. The lead wire's resistance change over temperature can add to or subtract from the RTD sensor's output and produce appreciable errors in temperature measurement.

To determine the resistance of the RTD (or any resistor), pass a measured current through it from a known voltage source. The resistance is then calculated using Ohm's law. To eliminate the measurement error contributed by lead wires, connect a second set of voltage-sensing leads to the sensor terminals and connect the opposite ends to corresponding sensor terminals at the signal conditioner. This is called a 4-wire RTD measurement. The sensor voltage is measured directly and eliminates the voltage drop in the current carrying leads.

Measurement Approaches

2-Wire, 3-Wire, and 4-Wire Configurations

Five types of circuits are used for RTD measurements using two, three, and four lead wires: 2-wire with current source, 3-wire with current source, 4-wire with current source, 3-wire with voltage source, and 4-wire with voltage source.

Figure 9 shows a basic 2-wire resistance measurement method. The RTD resistance is measured directly from the ohmmeter, but this connection is rarely used because the lead wire resistance and temperature coefficient must be known. Often, both properties are not known, nor are they convenient to measure when setting up a test.

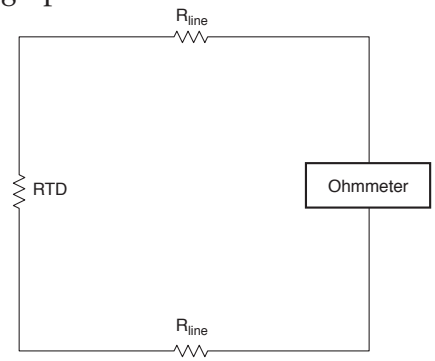

Fig. 9: 2-Wire RTD. The simplest arrangement for an RTD measurement is a simple series circuit containing only two wires connected to an ohmmeter.

Figure 10 shows a basic 4-wire measurement method using a current source. The RTD resistance is V/A. This connection is more accurate than the 2-wire method, but it requires a high-stability current source and four lead wires. Because the high-impedance voltmeter does not draw appreciable current, the voltage across the RTD equals V_m.

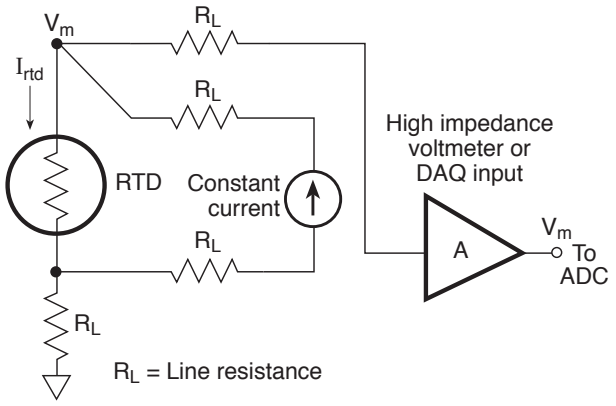

Fig. 10: 4-Wire RTD with Current Source. The 4-wire RTD method with a current supply eliminates the lead wire resistance as a source of error.

$$R_{rtd} = \frac{V_m}{I_{rtd}}$$

Where:

R_{rtd} = RTD resistance, Ω

V_m = Voltmeter reading, V

I_{rtd} = RTD current, A

Equation 3: 4-Wire RTD With Current Source.

Figure 11 shows a 3-wire measurement technique using a current source. The symbols V_a and V_b represent two voltages measured by the high-impedance voltmeter in sequence through switches (or a MUX) S_1 and S_2. The RTD resistance is derived from Kirchhoff's voltage law and two simultaneous equations. The benefit of this connection over that shown in Figure 10 is one fewer lead wire. However, this connection assumes that the two current-carrying wires have the same resistance.

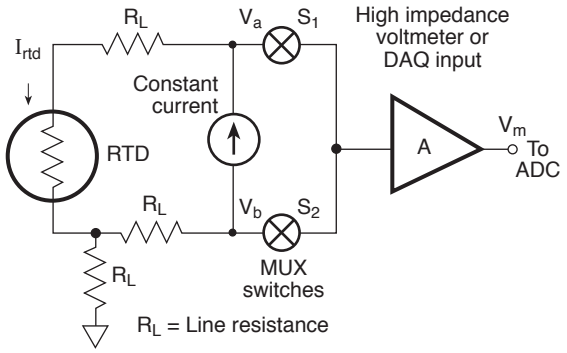

Fig. 11: 3-Wire RTD With Current Source. The 3-wire RTD method with a current supply is similar to the 3-wire method. It simply eliminates one additional wire. Measure V_a first, then measure V_b.

$$R_{rtd} = \frac{(V_a - V_b)}{I_{rtd}}$$

Equation 4: 3-Wire RTD With Current Source.

Figure 12 shows a 4-wire measurement system using a voltage source. The RTD resistance also is derived from Kirchhoff's Voltage Law and four simultaneous equations based on the four voltages, V_a through V_d. The voltage source in this circuit can vary somewhat as long as the sense resistor remains stable.

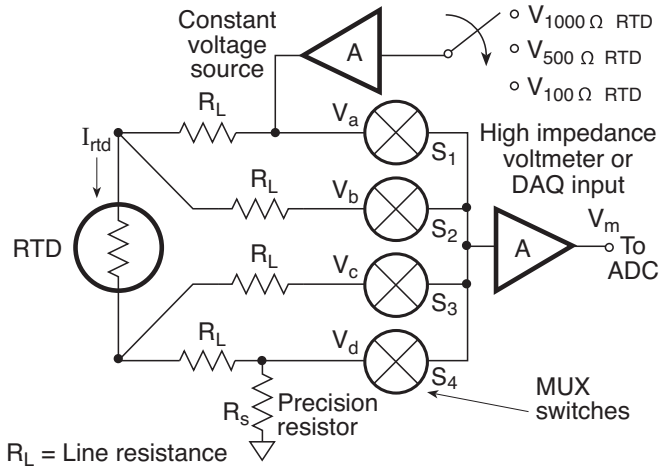

Fig. 12: 4-Wire RTD With Voltage Source. The 4-wire RTD circuit with a voltage source is more complex than the 4-wire with current source, but the voltage is allowed to vary somewhat provided the sense resistor is stable.

$$R_{rtd} = \frac{R_s (V_b - V_c)}{V_d}$$

Equation 5: 4-Wire RTD With Voltage Source.

The RTD output is more linear than the thermocouple, but the measurement range is smaller.

Figure 13 shows a 3-wire measurement technique using a voltage source. The RTD resistance is derived from Kirchhoff's Voltage Law and three simultaneous equations. The voltage source can vary as long as the sense resistor remains stable, and the circuit is accurate as long as the resistances of the two current-carrying wires are the same.

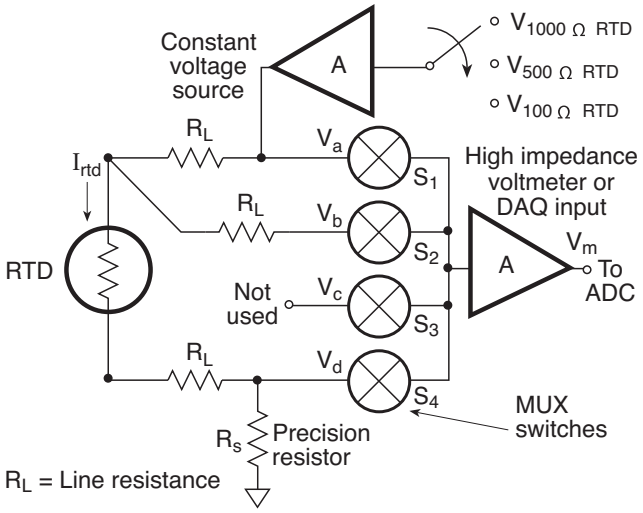

Fig. 13: 3-Wire RTD With Voltage Source. This is a variation of the 4-wire circuit with a voltage source and a stable sense resistor.

$$R_{rtd} = \frac{R_s (2V_b - V_a - V_d)}{V_d}$$

Equation 6: 3-Wire RTD With Voltage Source.

The RTD output is more linear than the thermocouple, but its range is smaller. The following Callendar-Van Dusen equation is often used to calculate the RTD resistance:

$$R_T = R_O + R_O\,\alpha\left[T - \delta\left(\frac{T}{100} - 1\right)\left(\frac{T}{100}\right) - \beta\left(\frac{T}{100} - 1\right)\left(\frac{T^3}{100}\right)\right]$$

Where:

R_T = resistance at T, Ω

R_O = resistance at T = 0 ˚C, Ω

α = temperature coefficient at T = 0 ˚C

δ = 1.49 (for platinum)

β = 0, when T>0

β = 0.11, when T<0

Equation 7: RTD Curve Fitting.

An alternative method involves measuring RTD resistances at four temperatures and solving a 20th-order polynomial equation with these values. It provides more precise data than does the α, β, and δ coefficients in the Callendar-Van Dusen equation. The plot of the polynomial equation in Figure 16 shows the RTD to be more linear than the thermocouple when used below 800 ˚C, which is the maximum temperature for RTDs.

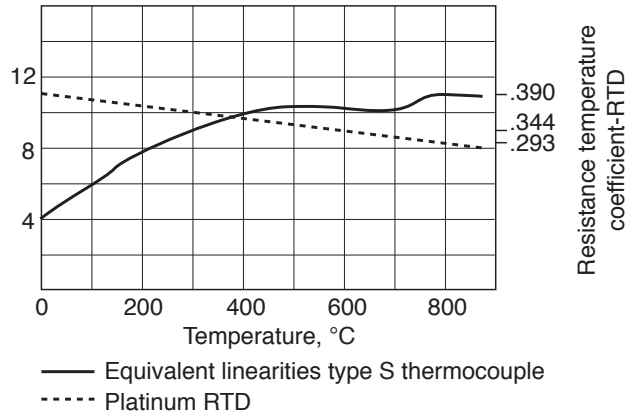

Fig. 14: Type S Thermocouple vs. Platinum RTD. Platinum is the material of choice for RTDs and thermocouples because it is stable and resists corrosion. Here, the RTD is shown to be more linear under temperatures of 800 ˚C than the thermocouple.

Additional Concerns

Self-Heating

Another source of error in RTD measurements is resistive heating. The current, I, passing through the RTD sensor, R, dissipates power, $P = I^2R$. For example, 1 mA through a 100 Ω RTD generates 100 µW. This may seem insignificant, but it can raise the temperature of some RTDs a significant fraction of a degree. A typical RTD can change 1 ˚C/mW by self-heating. When selecting smaller RTDs for faster response times, consider that they also can have larger self-heating errors.

A typical value for self-heating error is 1 ˚C/mW in free air. An RTD immersed in a thermally-conductive medium distributes this heat to the medium, and the resulting error is smaller. The same RTD increases by 0.1 ˚C/mW in air flowing at 1 m/s. Self-heating errors can be reduced by using the minimum excitation current that provides the desired resolution and the largest, physically practical RTD.

Scanning Inputs

Because lower currents generate less heat, currents between 100 µA and 500 µA are typically used. This lowers the power dissipation to a range which most applications tolerate. Further reducing the current lowers accuracy because RTDs become more susceptible to noise and are more difficult to measure. Switching the current on only when the measurement is made can further reduce the RTD self-heating. In a multichannel system, for example, the excitation current can be multiplexed, much like the analog inputs. In a 16-channel system, the current only excites each RTD one out of 16 times, reducing the power delivered to each RTD from 100% to only 6%. The downside to this approach is that a time constant is created, causing a delay in voltage and thermal settling (equilibrium).

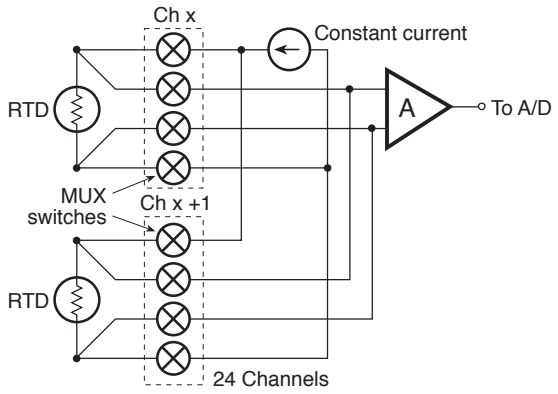

Fig. 15: Constant-Current Scanning Module. The constant-current source is sequentially switched among the various RTD sensors to keep them cooler over the measurement interval and prevent resistive-heating errors.

Two practical methods for scanning multiple RTDs include constant current excitation and ratiometric. Figure 15 shows an example of a constant current excitation circuit – an RTD scanning module that switches a single 500 µA constant current source among 16 channels. A series of front-end multiplexers directs the current to each channel sequentially while the measurement is being taken. Both 3- and 4-wire connections are supported to accommodate both types of RTDs. By applying current to one RTD at a time, errors due to resistive heating become negligible. The advantages of the constant current method include simple circuits and improved noise immunity. The disadvantage is the high cost of buying or building an extremely stable constant current source.

RTD measurements can be made in 2-wire, 3-wire, and 4-wire configurations.

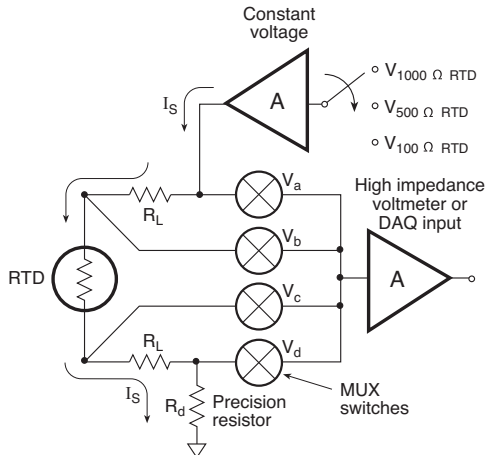

Fig. 16: Ratiometric 4-Wire RTD. Four voltage readings are taken for each RTD channel. The precision resistor measures I_s; the RTD current, V_b and V_c measure the RTD voltage; and the RTD resistance equals $(V_b - V_c)/I_s$.

By contrast, the ratiometric method uses a constant voltage source to provide a current, I_s, through the RTD and a resistor, R_d. Four voltage readings are taken for each RTD channel, V_a, V_b, V_c, and V_d (Refer to Figure 16). The current, voltage, and resistance of the RTD is shown in Equation 8:

$$I_s = \frac{V_d}{R_d}$$
$$V_{rtd} = V_b - V_c$$
$$R_{rtd} = \frac{V_{rtd}}{I_s}$$

Equation 8: 4-Wire RTD Ratiometric Measurement.

For a 3-wire connection (Refer to Figure 17), the voltage, $V_a - V_c$, includes the voltage drop across only one lead. Because the two extension wires to the transducer are made of the same metal (the leads must also be of the same length), assume that the drop in the first wire is equal to the drop in the second wire. The voltage across the RTD and its resistance are shown in Equation 9:

$$V_{rtd} = V_a - 2(V_a - V_b) - V_d$$
$$R_{rtd} = R_d\left(\frac{V_{rtd}}{V_d}\right)$$

Equation 9: 3-Wire RTD Ratiometric Measurement.

Practical Precautions

The RTD is more fragile than the thermocouple and should be protected during use.

RTDs require the same precautions that apply to thermocouples, including using shields and twisted-pair wire, proper sheathing, avoiding stress and steep gradients, and using large-diameter extension wire. In addition, the RTD is more fragile than the thermocouple and needs to be protected during use. Thermal shunting also is a bigger concern for RTDs than for thermocouples because the mass of the RTD is generally much larger (Refer to Figure 17).

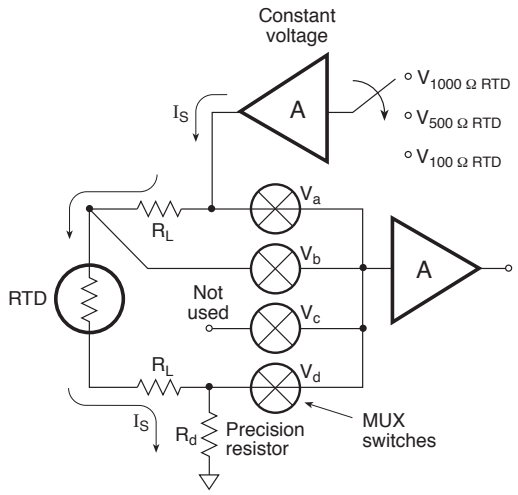

Fig. 17: Ratiometric 3-Wire RTD. The 3-wire ratiometric circuit assumes that both sense-wire resistances in the 4-wire circuit are the same. The equation for calculating RTD resistance simply accounts for it with a factor of two.

	Small RTD	Large RTD
Response time	Fast	Slow
Thermal shunting	Low	Poor
Self-healing error	High	Low

Table 3: RTD Resistance Comparison: Small Resistance vs. Large Resistance. Although smaller RTDs respond faster to temperature changes, they are more susceptible to inaccuracy from self-heating.

Thermistor Temperature Measurement

Thermistor Sensor Basics

Thermistors are similar to RTDs because they change resistance between their terminals with a change in temperature. However, they can be made with either a positive or negative temperature coefficient. In addition, they have a much higher ratio of resistance change per ˚C (several %) than do RTDs, which makes them more sensitive and also limits their temperature measurement range.

Thermistors are generally composed of semiconductor materials or oxides of common elements, such as cobalt, copper, iron, manganese, magnesium, nickel, and others. They typically come with three- to six-inch leads that are encapsulated and color-coded. They are available in a range of accuracies from ±15 ˚C to ±1 ˚C with a nominal resistance ranging from 2,000 Ω to 10,000

Thermistors are more sensitive than RTDs but have a smaller temperature range.

Ω at 25 ˚C. A value of 2,252 Ω is common and can be used with most instruments. A plot of the temperature versus resistance characteristic curves is usually provided with the device to determine the temperature from a known resistance. However, the devices are highly nonlinear, and the Steinhart-Hart equation (Equation 10) can be used to calculate the temperature:

$$\frac{1}{T} = A + B(\log_e R) + C(\log_e R)^3$$

Where:
T = temperature, ˚K
A, B, and C = fitting constants
R = resistance, Ω

Equation 10: Thermistor Temperature.

The constants A, B, and C are calculated from three simultaneous equations with known data sets: Insert R_1 and T_1; R_2 and T_2; R_3 and T_3; then solve for A, B, and C. Interpolation yields a solution accurate to ±0.01 ˚C or better.

Linearization

Some thermistor manufacturers supply devices that provide a near-linear output. They use multiple thermistors (positive and negative coefficients) or a combination of thermistors and metal film resistors in a single package. When connected in certain networks, they produce a linearly-varying voltage or resistance proportional to temperature. The voltage divider shown in Figure 18 is represented by the following widely-used equation:

$$E_{out} = E_{in}\left(\frac{R}{R + R_o}\right)$$

Where:
E_{out} is the voltage drop across R

Equation 11: Thermistor Voltage Divider.

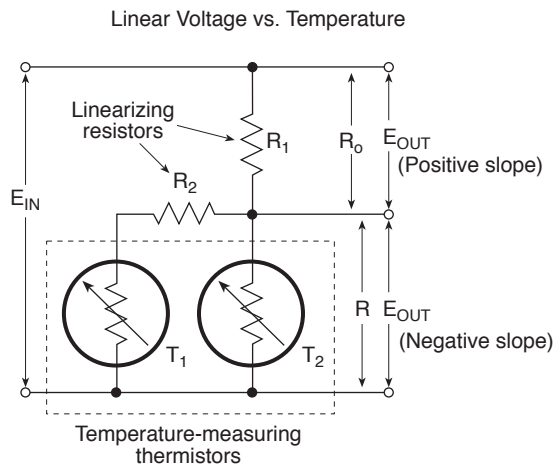

Fig. 18: Linearize Thermistor Output Voltage. The compensating resistors in series with the thermistors improve linearity near the center of the thermistor S-shaped characteristic curve. This is where the sensitivity is the greatest, and its operating temperatures can be extended to cover a wider range.

Software linearization has made hardware methods virtually obsolete.

If R is a thermistor, and the output voltage is plotted against the temperature, the curve resembles an S-shape with a fairly straight center portion. However, adding other resistors or thermistors to R linearizes the center portion of the curve over a wider temperature range. The linear section follows the equation of a straight line, Y = mX + b:

$E_{out} = \pm MT + b$
Where:
T = temperature in ˚C or ˚F
b = value of E_{out} when T = 0
M = slope, volts per degree T in ˚C or ˚F,
V/˚C or V/˚F

Equation 12: Thermistor Voltage Mode.

For the resistance mode, see Figure 19.

$R_t = MT + b$
Where:
T = temperature in ˚C or ˚F
b = value of the total network resistance R_t in Ω when T = 0
M = slope, Ω per degree T in ˚C or ˚F,
Ω/˚C or Ω/˚F

Equation 13: Thermistor Resistance Mode.

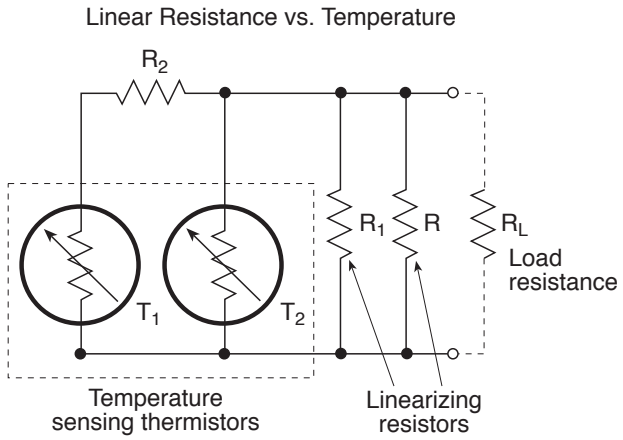

Fig. 19: Linearize Thermistor Output Resistance. Compensating resistors in the network linearize the resistance change vs. temperature in the same manner as they do for the voltage mode.

Although much research has gone into developing linear thermistors, most modern data acquisition system controllers and software handle the linearization, which makes hardware linearization methods virtually obsolete.

Additional Concerns

Stability

Thermistors are inherently and reasonably stable devices, and are not normally subject to large changes in nominal resistance with aging, nor with exposure to strong radiation fields. However, prolonged operation over 90 ˚C can change the tolerance of thermistors, particularly those with values less than 2,000 Ω. Smaller and more fragile than thermocouples and RTDs, they cannot tolerate much mishandling.

Time Constant

The time required for a thermistor to reach 63% of its final resistance value after being thrust into a new temperature environment is called its time constant. The time constant for an unprotected thermistor placed in a liquid bath may range from 1 second to 2.5 seconds. The same device exposed to an air environment might require 10 seconds, while an insulated unit could require up to 25 seconds. Seven time constants is a universally accepted value to consider when the device has reached its plateau or about 99% of its final value. Therefore, a device in the liquid bath might take as long as 7 seconds to stabilize, while the same device in air could take more than 2 minutes.

Dissipation Factor

The power required to raise the temperature of a thermistor 1 ˚C above the ambient is called the dissipation factor. It is typically in the mW range for most devices. The maximum operating temperature for a thermistor is about 150 ˚C.

Tolerance Curves

Thermistors are well suited to measuring temperature set points, and each thermistor brand comes with its unique curve that is often used to design ON/OFF control circuits. Manufacturers have not standardized thermistor characteristic curves to the extent they have for thermocouples and RTDs.

Wheatstone bridge

Thermistors provide accurate temperature measurements when used in one leg of a Wheatstone bridge, even at considerable distances between the thermistor and the bridge circuit (Refer to Figure 20A). The lead length is not a critical factor because the thermistor resistance is many times that of the lead wires. Many thermistors can be widely distributed throughout the lab or facility and switched into the data-acquisition system without significant voltage drops across the switch contacts (Refer to Figure 20B).

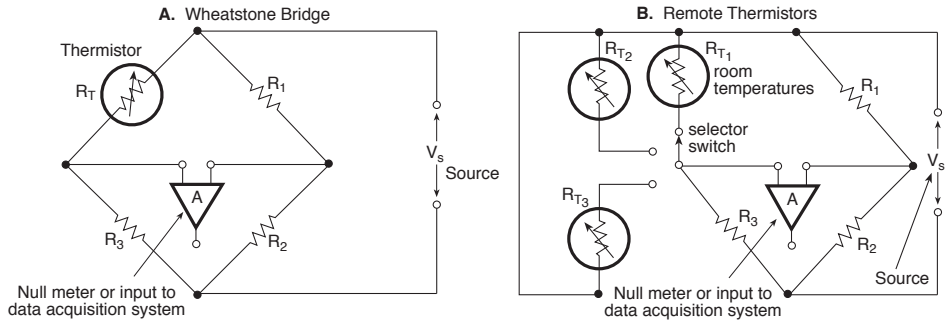

Fig. 20: Thermistors in a Wheatstone Bridge. An accurate temperature sensor can be fashioned from a thermistor in one leg of a bridge circuit. Lead length is not significant, so several sensors may be switched in and out of a single monitor without losing accuracy. Two thermistors make a differential thermometer that can be used for measuring temperature changes along a piping system or between various elevations in a building to balance the heating and air conditioning unit.

Differential Thermistors

Two thermistors can be used in a Wheatstone bridge to accurately measure the difference in temperature between them. Thermistors can be attached to any heat-conducting medium in a system at various points to measure the temperature gradient along its length. Two or more thermistors may be placed in a room to measure temperatures at several different elevations using the same, basic switching arrangement.

Conclusion

MCC has delivered new hardware and software technologies that greatly simplify temperature measurements

Just as thermocouple systems have progressed from the need for ice baths to single-board solutions, technologies continue to make temperature measurement easier, cheaper, and more accurate. Understanding how temperature transducers work and the theories behind them is important; however, extensive investment in engineering and development by companies such as Measurement Computing Corporation (MCC) over the years has delivered new hardware and software technologies that greatly simplify temperature measurements.

MCC offers a wide-variety of temperature measurement products with interfaces that include USB, Ethernet, Wi-Fi, and stand-alone loggers. Not only does MCC offer best-in-class hardware solutions, but it also provides software to take measurements quickly and to integrate the hardware with application software, including Microsoft® Visual Studio®.NET, NI LabVIEW and DASYLab®.

At MCC, we are committed to designing high-quality measurement devices. We never sacrifice quality. Instead, we offer best-in-class design at affordable prices – always with free, live technical support. Let us help you find the right device for your measurement needs.

For more information on our temperature measurement products, please visit www.mccdaq.com/temperature.

MCC Temperature Measurement Solutions

Low-Cost USB
USB-TEMP & TC Series

- Measure thermocouples, RTDs, thermistors, or voltage
- 24-bit resolution
- 8 channels
- Included software & drivers

High-Accuracy, Multifunction USB
USB-2408 & 2416 Series

- Measure thermocouples or voltage
- 24-bit resolution
- Up to 64 channels
- Up to 4 analog outputs, digital I/O, & counters
- Included software & drivers

Stand-Alone Data Loggers
USB-5200 Series

- Measure thermocouples, RTDs, or thermistors
- 8 channels
- 8 digital I/O, configurable for alarming
- CompactFlash® memory card
- Included software & drivers

Low-Cost Data Loggers
USB-500 Series

- Measure temperature, humidity, voltage, current, or event/state change
- Up to 32 K readings
- Battery powered
- Internal memory
- Included software

Wireless
WiFi-500 Sensor Series

- Measure temperature and humidity
- Integrated display
- Internal memory
- Rechargeable battery
- Included software

Web-Based Measurements
WEB-TEMP & TC Series

- Measure thermocouples, RTDs, or thermistors
- Built-in web server/web page
- Ethernet connection
- 8 digital I/O
- Included software